Data sheet Torsion spring : T-19184R

GUTEKUNST FEDERN

07.2024

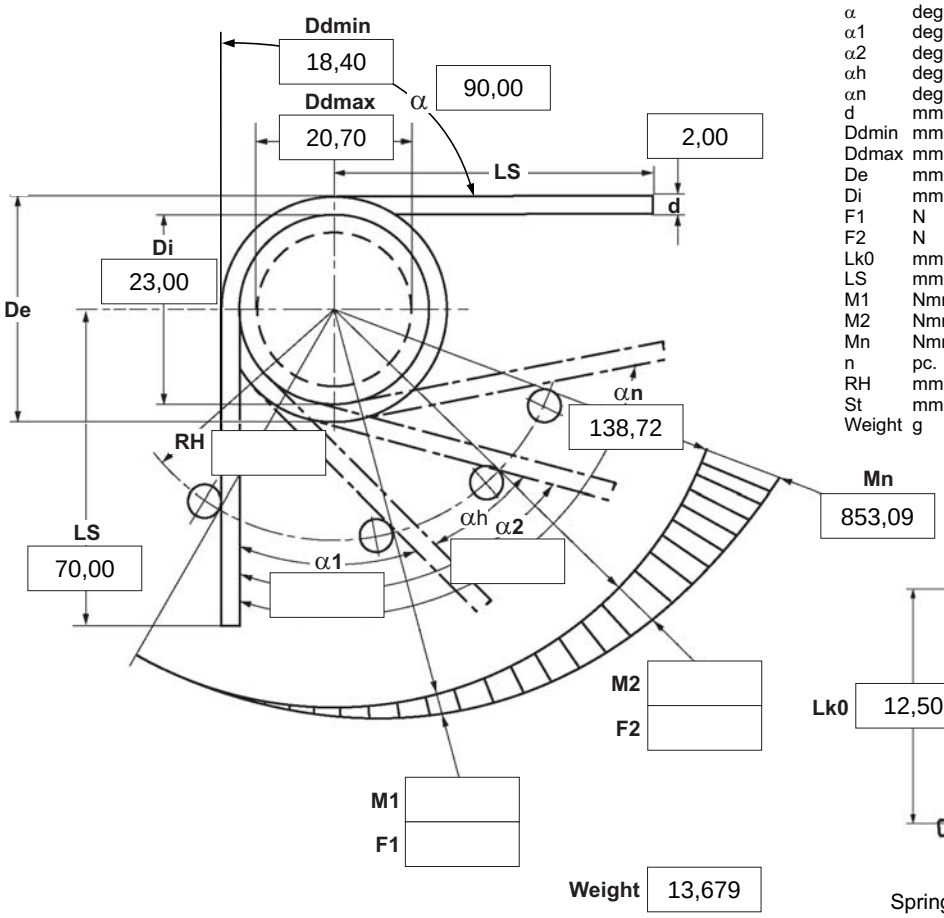

α	degree	Unstressed leg position
α1	degree	Prestressed rotational angle
α2	degree	Loaded rotational angle
αh	degree	Excursion
αn	degree	Maximum rotational angle
d	mm	Wire diameter
Ddmin	mm	Min. possible mandrel diameter
Ddmax	mm	Max. possible mandrel diameter
De	mm	Outer coil diameter
Di	mm	Inner coil diameter
F1	N	Prestressed spring force
F2	N	Loaded spring force
Lk0	mm	Length of spring body when relaxed
LS	mm	Length of leg
M1	Nmm	Prestressed torque
M2	Nmm	Loaded torque
Mn	Nmm	Maximum torque
n	pc.	Aktive coils
RH	mm	Distance power flow point from centre
St	mm	Distance between coils (pitch)
Weight	g	Weight of one spring in grammes

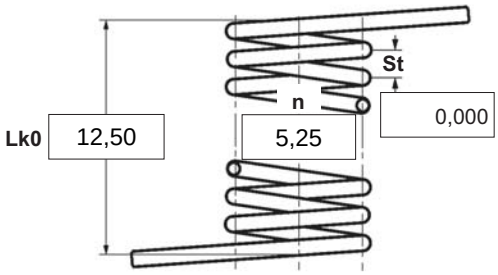

Spring test acc. to DIN ISO 2859/1 test level II

1 Coiling direction

☐ left ☒ right

2 Form of legs

tangential, straight, no bends *

*We can also supply torsion springs with any form of leg for an extra charge.

3 Fixing

Recumbent leg	Lever leg

4 Load

☐ in winding direction
☐ against winding direction

5 Excursion αh degr.

6 Stress cyc. end. N

7 Stress cycle frequ. n /

8 Application temp. °C

9 Material

EN 10270-3-1.4310

10 Wire or rod surface

☒ drawn ☐ rolled ☐ metal-cut

11 Surface treatment

12 Tolerances to DIN 2194

Grade	Di	Lk0	LSH,LSR	α,α1,α2	M1,M2	Wire diameter d to DIN 2076
1	☐	☐	☐	☐	☐	
2	☒	☒	☒	☒	☒	
3	☐	☐	☐	☐	☐	☒

13 Production compensation through

A spring torque and the associated swing angle	α	☒
A spring torque and the associated swing angle and α0	n, d	☐
	n, Di	☐
Two spring resistances and the associated swing angle	α, n, d	☐
	α, n, Di	☐

Remarks

Country of origin: DE | Customs tariff number: 73202089

Prices

Quantity scale	Single price [EUR]
1	5,2700 €
2	3,7200 €
3	3,5400 €
7	2,5100 €
17	1,2200 €
37	0,9000 €
75	0,7300 €
125	0,5070 €
175	0,4444 €
250	0,4132 €
350	0,3853 €
450	0,3536 €

Gutekunst + Co.KG Spring Factories · Carl-Zeiss-Straße 15 · D-72555 Metzingen
Sales +49 7123 960-192 · Customize springs +49 7123 960-193 · Main +49 7123 960-0
Fax +49 7123 960-195 · E-mail: order@gutekunst-co.com